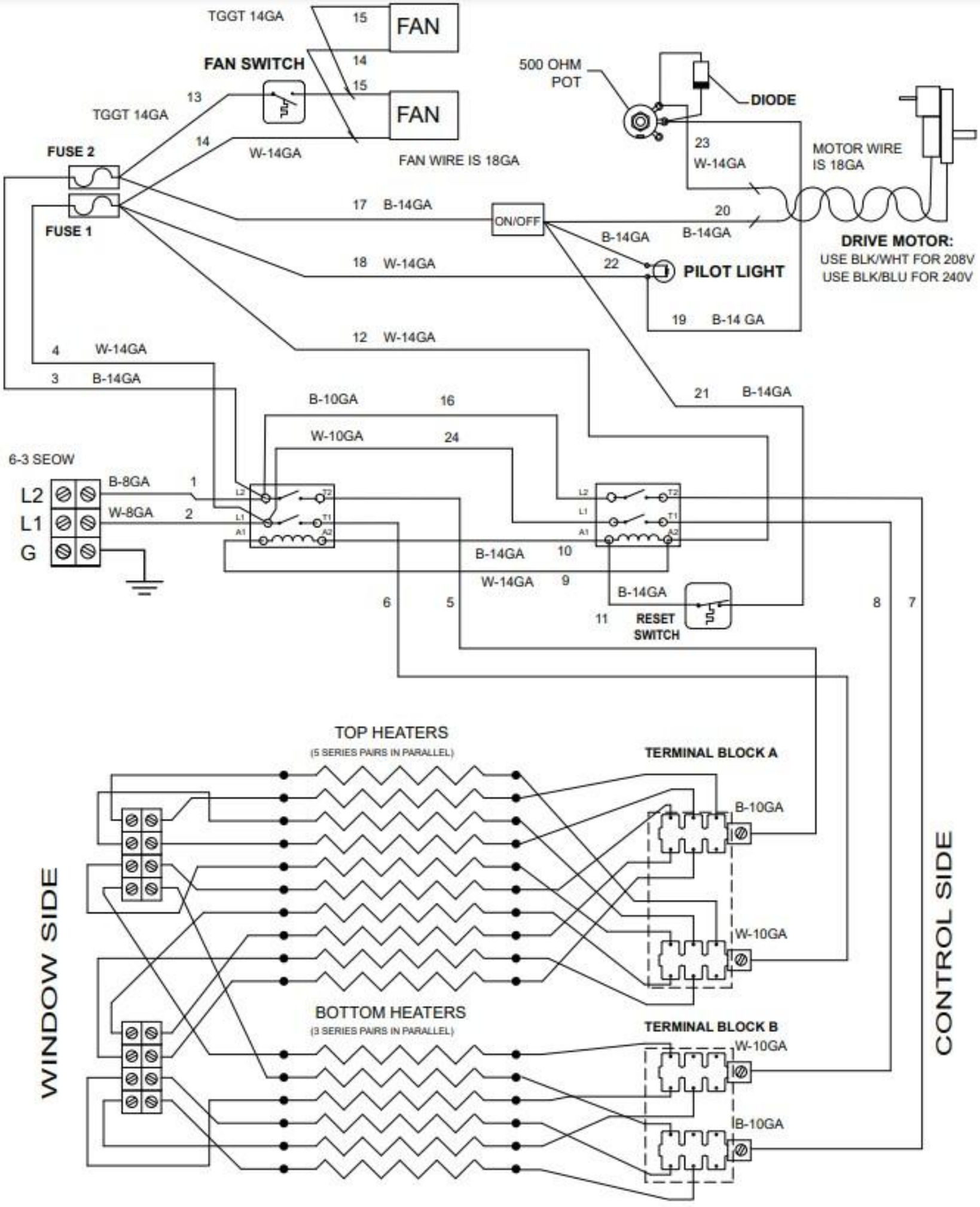
TGGT 14GA
15
FAN
FAN SWITCH
14
15
FAN
13
TGGT 14GA
14
W-14GA
FAN WIRE IS 18GA
500 OHM POT
DIODE
23
W-14GA
MOTOR WIRE IS 18GA
FUSE 2
FUSE 1
17 B-14GA
ON/OFF
20
B-14GA
B-14GA
DRIVE MOTOR:
USE BLK/WHT FOR 208V
USE BLK/BLU FOR 240V
18 W-14GA
22
PILOT LIGHT
19 B-14 GA
12 W-14GA
4 W-14GA
3 B-14GA
B-10GA
16
21 B-14GA
W-10GA
24
6-3 SEOW
L2
L1
G
B-8GA
1
W-8GA
2
B-14GA
10
W-14GA
9
B-14GA
6
5
11
RESET SWITCH
8
7
TOP HEATERS
(5 SERIES PAIRS IN PARALLEL)
TERMINAL BLOCK A
B-10GA
W-10GA
WINDOW SIDE
CONTROL SIDE
BOTTOM HEATERS
(3 SERIES PAIRS IN PARALLEL)
TERMINAL BLOCK B
W-10GA
B-10GA

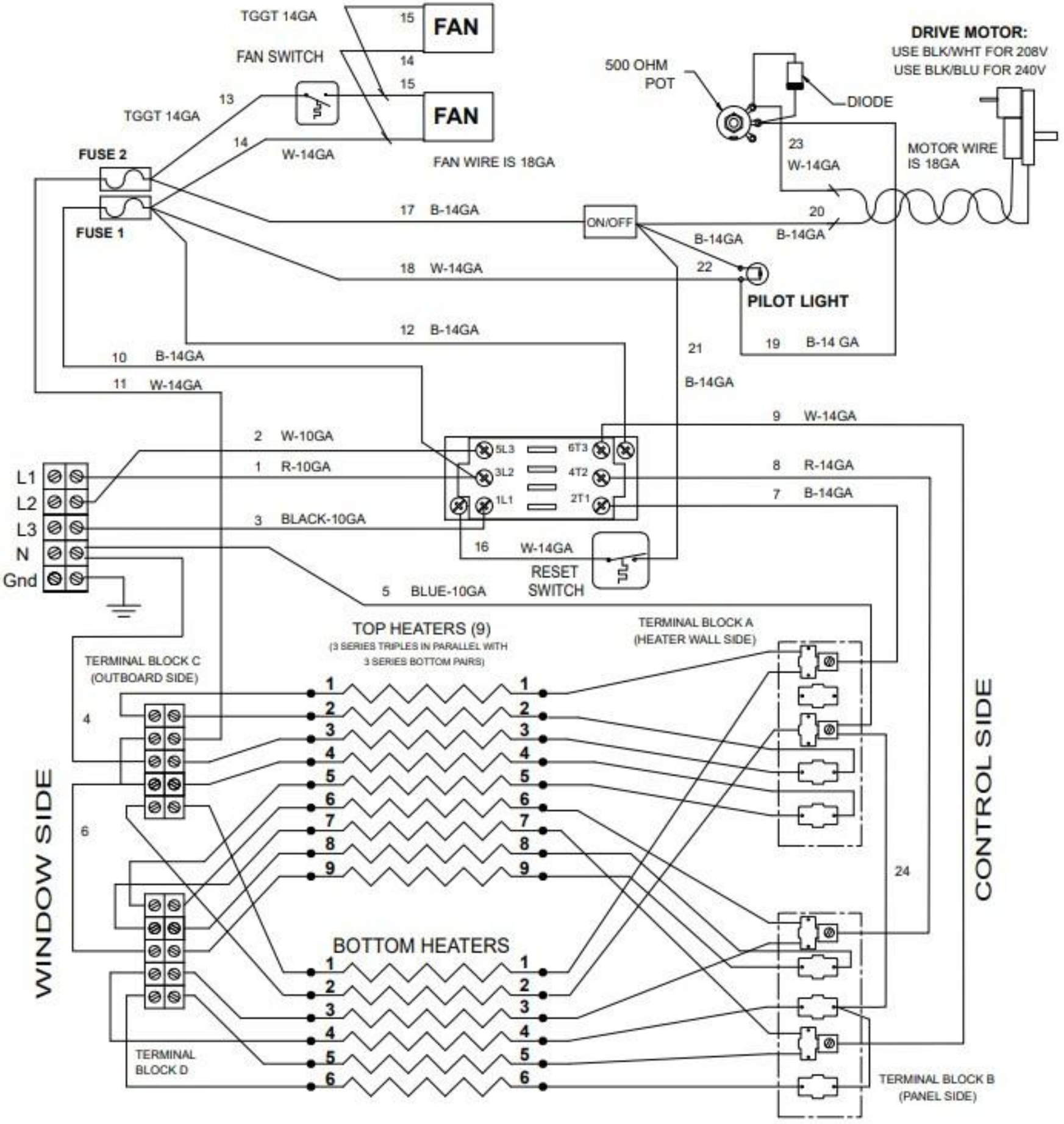
TGGT 14GA
15
FAN
FAN SWITCH
14
15
FAN
13
TGGT 14GA
14
W-14GA
FAN WIRE IS 18GA
FUSE 2
FUSE 1
17 B-14GA
ON/OFF
18 W-14GA
DRIVE MOTOR:
USE BLK/WHT FOR 208V
USE BLK/BLU FOR 240V
500 OHM
POT
DIODE
23
W-14GA
MOTOR WIRE
IS 18GA
20
B-14GA
B-14GA
22
PILOT LIGHT
19 B-14 GA
12 B-14GA
10 B-14GA
11 W-14GA
21
B-14GA
9 W-14GA
2 W-10GA
1 R-10GA
3 BLACK-10GA
5L3
3L2
1L1
6T3
4T2
2T1
8 R-14GA
7 B-14GA
L1
L2
L3
N
Gnd
16 W-14GA
RESET
SWITCH
5 BLUE-10GA
TOP HEATERS (9)
(3 SERIES TRIPLES IN PARALLEL WITH
3 SERIES BOTTOM PAIRS)
TERMINAL BLOCK A
(HEATER WALL SIDE)
TERMINAL BLOCK C
(OUTBOARD SIDE)
4
6
24
WINDOW SIDE
CONTROL SIDE
BOTTOM HEATERS
TERMINAL
BLOCK D
TERMINAL BLOCK B
(PANEL SIDE)

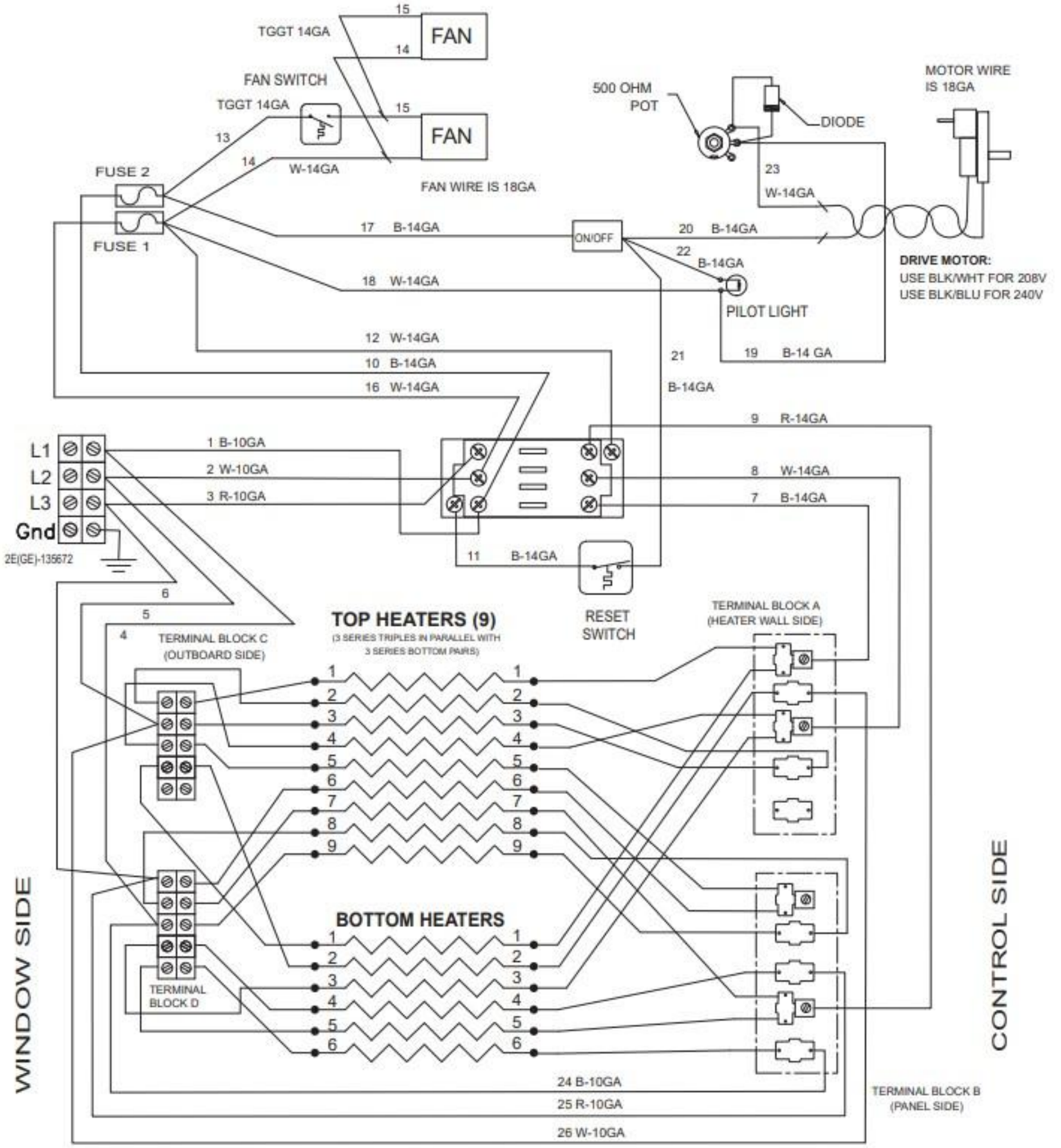
TGGT 14GA
15
14
FAN
FAN SWITCH
TGGT 14GA
15
FAN
13
14
W-14GA
FAN WIRE IS 18GA
FUSE 2
FUSE 1
500 OHM POT
DIODE
MOTOR WIRE IS 18GA
23
W-14GA
17 B-14GA
ON/OFF
20 B-14GA
22
B-14GA
18 W-14GA
PILOT LIGHT
DRIVE MOTOR:
USE BLK/WHT FOR 208V
USE BLK/BLU FOR 240V
12 W-14GA
10 B-14GA
16 W-14GA
21
B-14GA
19 B-14 GA
9 R-14GA
L1
L2
L3
Gnd
1 B-10GA
2 W-10GA
3 R-10GA
8 W-14GA
7 B-14GA
2E(GE)-135672
11 B-14GA
RESET SWITCH
6
5
4
TERMINAL BLOCK C (OUTBOARD SIDE)
TOP HEATERS (9)
(3 SERIES TRIPLES IN PARALLEL WITH 3 SERIES BOTTOM PAIRS)
TERMINAL BLOCK A (HEATER WALL SIDE)
BOTTOM HEATERS
TERMINAL BLOCK D
WINDOW SIDE
CONTROL SIDE
24 B-10GA
25 R-10GA
26 W-10GA
TERMINAL BLOCK B (PANEL SIDE)